Optical Theory in the 19th Century and the Truth about Michelson-Morley-Miller

by Laurence Hecht

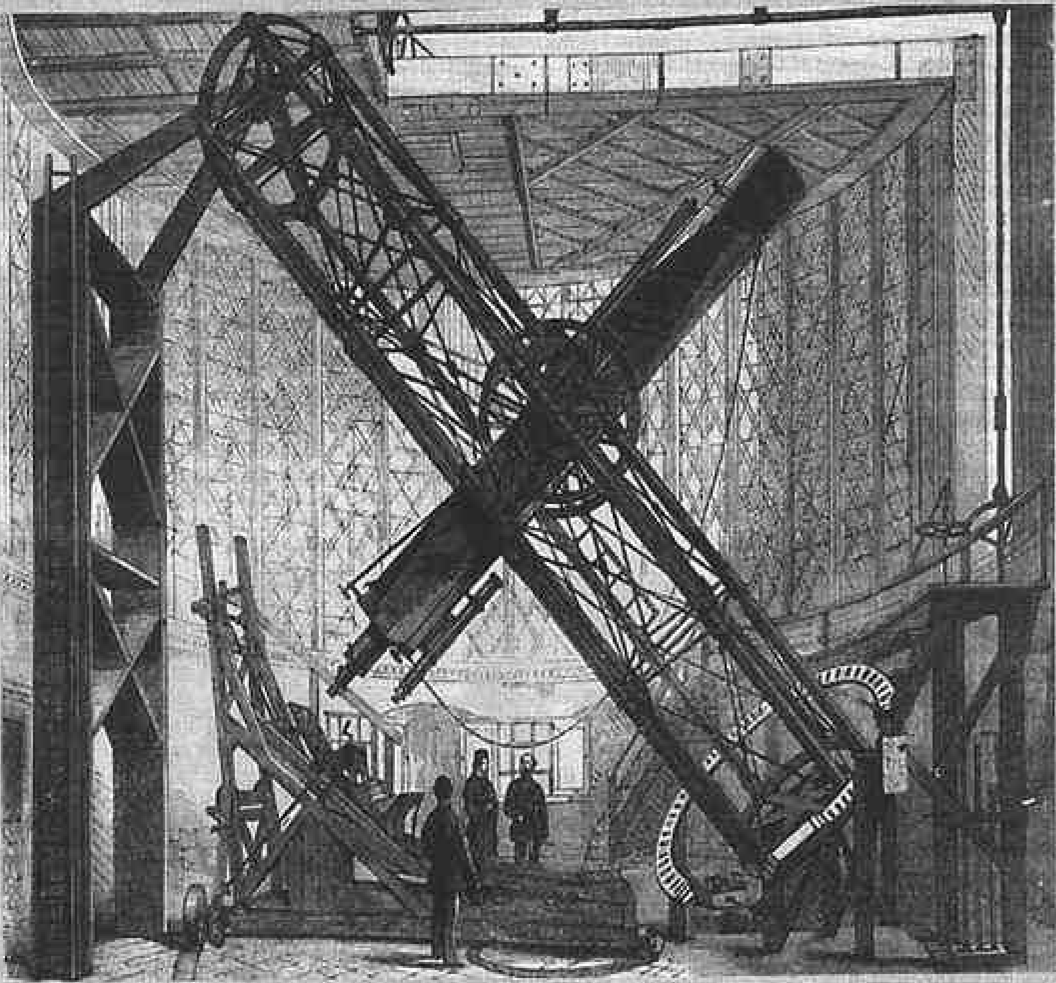

Corbis Bettmann/19th century illustration of the equatorial telescope at Greenwich

To understand the ground-breaking significance of Dayton Miller's ether drift measurements, one must go back to the original discoveries of Fresnel on the wave theory of light and its subsequent development in the 19th century.

The accompanying article by French physicist Maurice Allais (who is also the winner of the 1988 Nobel Prize in economics), presumes a familiarity with the classic experiments of American physicist Dayton C. Miller (1866-1941). For the reader unfamiliar with this important work, carried out during the first three decades of this century, and with the physical theory on which it is premised, we provide this summary review. Our interpretations may not, of course, agree in all cases with those of M. Allais.

1. Origin of the Wave Theory of Light

By the time of the death of Augustin Jean Fresnel in 1827, at the early age of 39, Isaac Newton's theory of light, which had prevailed for the entirety of the previous century, was dead and all but buried. The assault on Newton's *Optics* had originated in England itself with the work of the highly controversial genius Thomas Young; it was brought to a decisive conclusion by the Ecole Polytechnique's Augustin Fresnel, through an experimental-theoretical effort, lasting approximately 12 years, from 1814 to his untimely death.

Newton had argued that the principal phenomena in optics, such as the refraction (bending) of a ray of light when passing from one medium into another, or its diffraction (apparent bending around small objects), could be explained on the basis of a theory of attraction, consistent with his hypothesis of universal gravitation. In Newton's view, light rays consisted of trains of very small corpuscles, which, on encountering objects, are attracted to them in proportion to their mass. It is a consequence of this theory that light would travel at a greater velocity in denser substances, such as glass or water, than in air. Not until the middle of the 19th century was it possible to definitively prove that the opposite is the case.

Well before that time, Young and Fresnel had proved the invalidity of Newton's optics by focussing their efforts on the more subtle phenomenon of diffraction.

When a pencil of light of one color is directed at a very narrow object, such as a hair, or the edge of a knife, or is caused to pass through a small aperture or slit, and is then projected onto a screen, close examination with a magnifying lens reveals the presence, on the white screen, of parallel bands of alternating light and darkness. Young explained these *interference fringes*, as they came to be known, by reviving the wave theory of light, last propounded by Gottfried Leibniz's famous teacher and collaborator, Christiaan Huygens, in his 1678 *Treatise on Light.*

According to Huygens, a substance, known as the *ether*, consisting perhaps of invisibly small particles, must pervade all space, and the matter contained within it. The propagation of light, in this theory, consists of a wave-like disturbance of this ether, somewhat analogous to the passage of a wave on the surface of water. (The analogy of light, and sound, to water waves, which exhibit the phenomenon of interference, was first proposed by Leonardo da Vinci.) In Huygens's theory, an unobstructed light source sends out light in all directions, forming a spherical wave-front of expanding concentric spheres.

Young explained the alternating light and dark fringes, as seen on a screen placed behind a knife edge, for example, as places where light waves proceeding directly from the source to the screen, were meeting up with light waves that had been slightly deflected by the edge of the blade. Having thus travelled a slightly longer path, the deflected *(diffracted)* rays should be in a different *phase* than those which proceeded directly to the screen. (The concept of *phase* is best understood by analogy to water waves. If two water waves, as from the wakes of passing motor boats, cross each other when both are at their peak, or crest, the resultant wave formed by their momentary combination is larger than either of the two components. Alternatively, if the two waves cross when one is at its peak and the other in its trough, their momentary combination cancels the effect of either, producing a smooth surface on the water. The results are known, respectively, as *constructive* or *destructive* interference.)

By careful experimentation, Young was able to estimate the length of a light wave, with considerable accuracy, and to explain in great detail a variety of diffraction phenomena, including the fringes produced by thin plates separated by air or clear liquids. His success in developing the wave theory to take account of these complex phenomena was remarkable, especially considering that he worked almost alone in a country fanatically committed to defending Newton's system. After the publication of his early papers critical of Newton, Young became the object of a fierce attack by Henry Brougham, later Lord Chancellor of England, in the *Edinburgh Review*, an at-

After a portrait by Tardieu, Frontispiece from Vol. II of Fresnel's works

Archives Center, National Museum of American History

Augustin Fresnel (1788-1827)

Thomas Young (1773-1829)

Young and Fresnel proved the invalidity of Newton's optics by focussing their efforts on the more subtle phenomenon of diffraction, the disturbance in a wave front caused by a sma obstacle.

tack that was so successful that when Young attempted to reply by pamphlet, Young's work sold only one copy.

The son of a wealthy Quaker business family from Somersetshire, Young was a precocious polymath. He mastered eight languages by early adolescence, and later was said to be able to play every instrument in the orchestra with proficiency. He studied a year at Göttingen University in 1795, and returned to England to take a degree in medicine. His first study brought him into controversy with the leading authorities in the field, over the function of the crystalline lens in the eye in accommodation. He authored monographs in mechanics, geometry, natural history, and machine design, and took up the decipherment of Egyptian hieroglyphics, making important early contributions to the field.

Fresnel Revives Huygens's Principle

In 1814-1818, the further development of the wave theory shifted ground to France, where the superior resources of the Ecole Polytechnique, and a 150-year tradition of Leibnizian science would be brought to bear on it. Augustin Fresnel, already by then in intimate dialogue with André-Marie Ampère on matters of theology and natural philosophy, began his attack on the problem in 1814.

Fresnel was born May 10, 1788, at Broglie in Normandy. The revolution having interrupted his father's work as an architect on the harbor at Cherbourg, the family moved to a small town near Caen, where young Fresnel was raised and schooled. He showed no taste for languages, and was an undistinguished student in his early years. But his scientific talents bloomed early; he designed toy bows of such power, for use in childhood war games, that the neighborhood parents had to confiscate them. His childhood friends called him "the genius."

Fresnel entered the Ecole Polytechnique in Paris at age 16, in poor health, but so distinguished himself in geometry as to win public praise from the famed Legendre. He worked for 10 years in a modest position as a civil engineer in the department of *ponts et chaussées* (bridges and roads). His work in optics began in 1814, the same year he allied himself to the cause of the Bourbon restoration. He so vehemently opposed the brief return of Napoleon in 1815, that he was deprived of his office during the Hundred Days, although he was allowed to live in Paris. Between then and 1824, amid intermittent bouts of ill health, he revolutionized physical science with his work in optics. Poor health in 1824 forced him to abandon all scientific research, except for a successful project to design a new type of lens for lighthouses. He died in 1827, barely 39 years old.

In 1816, François Arago, then in experimental collaboration with Fresnel, visited Young in England to discuss the interpretation of polarization. By 1818, Fresnel had made a discovery that brought the wave theory beyond the point achieved by Young. To do so, he reintroduced a hypothesis concerning the propagation of light which had first been proposed by Huygens more than a century earlier, and whose broader implications are yet to be explored.

In examining more closely the conditions under which interference fringes are produced, by the interposition of a slit or narrow object into the light path, Fresnel saw that it was insufficient to suppose that the fringes resulted merely from the interaction of the direct rays from the source, with rays deflected by the small obstruction. Rather, it was necessary to suppose that every point of the advancing wave front acts like an independent source of reproduction of the initial disturbance, which we call light. Thus, from each point in the space surrounding a light source, new spherical wave fronts are being generated. If no obstruction is encountered, the light from these new spherical sources will continue onward on the same outwardly directed radial lines, while the backward-directed rays will be cancelled as a result of interference effects.

Suppose, however, that the spherical wave front should pass through a small aperture in a screen as in Figure 1. Let *AG* be the small aperture through which the light from *C* passes. Let *P* represent the darkest point in the darkest band of the interference fringe formed on the screen *BD*. According to the earlier interpretation of Young, the darkness is produced by the meeting of the two extreme rays, *AP* and *GP*, whose difference in length corresponds to one-half wavelength (that is, to a maximum difference in phase, where, by analogy to water waves, crest meets trough).

But, careful experimentation showed Fresnel that the darkest point in the darkest band occurred where the difference in length between the extreme rays, *AP* and *GP*, corresponded to one whole wavelength. If the two extreme rays, *AP* and *GP*, were alone responsible, they would interfere constructively to produce here a maximum illumination. By careful consideration of this paradox, Fresnel was led to a new hypothesis, combining the principle of interference with Huygens's Principle of propagation.

The light passing through the aperture *AG* constitutes a very small segment of the spherical wave front emanating from *C*.

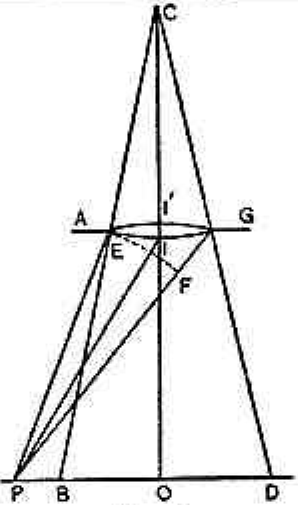

Figure 1
FRESNEL APPLICATION OF HUYGENS'S WAVE THEORY TO INTERFERENCE
Light of one color, originating at C and passing through the small aperture AG will form dark and light bands, known as interference fringes, on the screen PBOD. Augustin Fresnel (1788-1827) applied Huygens's Principle of continuous re-propagation of light to explain the phenomenon.

At each point along this segment *AG*, according to Huygens's Principle, new, secondary waves are being generated, whose effect at the point *P* cannot be ignored. Fresnel shows that it is the action of these secondary waves which produces the destructive interference, hence darkness, at *P*.

To see how, Fresnel asks us to imagine another ray, *PI*, drawn to meet the center of the arc *AG*. Because of its marked inclination to the arc (when *P* falls close to the center *O*, the interference patterns disappear), the ray *PI* is almost exactly the mean between *GP* and *AP*. As these differ by one whole wavelength, *PI* must be in exactly opposite phase with either of them. The result of its interaction with either is destructive interference at *P*, and the same is true of corresponding pairs of secondary rays coming from the two halves of the arc. As Fresnel describes it in the report of his experimental *tour de force:*

> We now have the arc divided into two parts, whose corresponding elements are almost exactly equal, and send to the point *P* vibrations in exactly opposite phases, so that these must annul each other.[1]

In later investigations, Fresnel worked out the theory of reflection and refraction, polarization, and the transverse nature of light vibrations, showing all to be in accord with his wave conception. His treatment of the phenomenon of double refraction, occurring in certain types of crystals, where two rays, refracted at different angles, an *ordinary* and *extraordinary* ray, are produced from a single pencil of light, drew much attention. His solution required the construction of a geometrical surface of the fourth order to describe the hypothesized density distribution of the ether within a certain type of such crystals, known as biaxial. In 1832, the Irish mathematician William Rowan Hamilton noted that points of discontinuity in Fresnel's surface should give rise to physical singularities in the propagation of light rays passing through them, which results were verified in the course of subsequent decades, establishing the validity of Fresnel's theory with great certainty.

The second half of the 19th century saw an explosion of attempts to provide what came to be known as a *dynamical* model of Fresnel's ether. By this was meant, essentially, a mechanical analogy (such as, for example, the supposition that the ether is an elastic solid like a crystal), from which the equations describing the behavior of light could be deduced with mathematical consistency.

The essential flaw in such an approach was the unquestioned assumption that processes in the universe could fit a simple mechanical analogy. Fresnel had to battle early efforts along these lines by his rival Siméon Denis Poisson (1781-1840). Poisson's ether, Fresnel remarked in correspondence with Poisson, was only "a mathematical abstraction," not the real thing. Or, to put the matter on broader foundation, one might ask: why should God have so constructed the universe that the propagation of light be explicable by analogy either to a fluid, or to a simple mineral crystal? To Fresnel and his philosophical allies, such as Ampère, as to Carl F. Gauss and Wilhelm Weber in Germany, whose parallel researches in magnetism and electricity were leading to similar paradoxes,[2] such reductionism was not acceptable. But, among the leading scientists of the generation following Fresnel, only Bernhard Riemann at Göttingen University dared a full-scale assault on the reductionist prejudices then engulfing scientific discourse. In a bold effort, Riemann attempted to construct a new physics in which the principle of operation of the human mind in generating new thoughts, rather than a simpler, mechanical analogy, or formal mathematical representation thereof, was to be the foundation.[3]

Unfortunately, the work of Riemann and a small circle of associates was effectively contained, with the result that the main line of experimental development in optics proceeded from the far more restricted framework established by James Clerk Maxwell, beginning about 1858. This is the standpoint sometimes referred to as the English school, although it originated with the leading French opponents of Fresnel and Ampère—namely, Pierre Simon Laplace, Poisson, Augustin Louis Cauchy, and Jean Baptiste Biot.[4]

2. The Question of Relative Motion

The paradox that consistently arose to explode all efforts at constructing a self-consistent theory of the propagation of light, centered on the question of the effect of the relative motion of the medium on the velocity of light. To best understand this paradox, we go back to the discovery of the phenomenon known as *aberration*.

The Danish astronomer Ole Rømer first suggested the existence of aberration, in a 1677 letter to Huygens. In 1728, the English astronomer James Bradley reported on observations confirming the presence of such a phenomenon as the result of the retarded rate of propagation of light.[5] From Bradley's standpoint, which was that of the corpuscular theory of light, aberration could be explained in the following way.

Imagine that you are trying to land a drop of water from an eye dropper directly onto the bottom of a narrow test tube, which is attached to the outside of a revolving turntable. If the opening of the test tube is pointed directly up at the eye dropper, the water droplet will clearly hit the side of the test tube before striking the bottom. The problem is that in the time the droplet falls from its entry into the mouth of the tube, the side of the test tube moves forward to meet it. This problem can be overcome by inclining the test tube forward, in the direction of its motion. If the angle is correct, a drop of water entering the mouth of the test tube, will fall to the bottom, never touching the side of the tube. The proper angle of inclination will depend on the ratio of the velocity of the turntable to the velocity of the falling water droplet.

Now, substitute for the test tube, the tube of a telescope; for the turntable, the Earth's motion in its orbit; and, for the velocity of fall of the water droplet, the velocity of light. The latter two quantities are, respectively, 30 and 300,000 kilometers per second. This leads to a desired angle of inclination of a telescope tube of a little more than 20 seconds of arc (about 1/180th of a degree) in the direction of the Earth's orbital motion, when viewing a star whose actual position is directly overhead. The figure of roughly 20.5 seconds of arc is known as the *constant of aberration*.

The same explanation applies on the assumption that the light consists of a wave, or a train of waves, traveling down the telescope tube, as the tube is propelled through space. One must, however, assume that the ether inside the telescope tube is not carried along with it (if it were, there would be no aberration); rather, that the Earth, and the telescope tube, move

Courtesy of Case Western Reserve University Archives

Albert Michelson with his interferometer in the 1920s.

freely through the ethereal medium, which must be at rest with respect to the Earth's motion. Notice that we are considering two media here: the air in the telescope tube, which we assume to be carried along with the tube, and the luminiferous ether, which we suppose passes through the pores of matter "as freely as the wind through a grove of trees" (Young).

Suppose, now, that instead of air, we fill the telescope tube with water. We know precisely the rate at which the velocity of light is slowed in water , as compared to air. Looking at our example of the water drop and test tube, we should have the case now, in which the drop falls more slowly, and thus the tube would need to be more inclined—that is, a greater constant of aberration. But experiments by the English astronomer G.B. Airy, in 1871, showed that there was no change in the constant of aberration using a water-filled telescope.

This was precisely the result anticipated by Fresnel a half a century earlier, when he formulated his theory to explain the results of experiments by the French astronomer Arago, which had shown that the motion of the Earth does not change the refraction of starlight by the Earth's atmosphere. To explain the lack of change in the constant of aberration, when the transmitting medium is changed, Fresnel introduced the hypothesis that the ether is carried along, or convected (*entrainé*), inside the telescope tube. To explain the variations in index of refraction between different transparent media, his predecessor, Young, had already supposed that the ether is more compressed inside of substances with a higher refractive index. In an 1818 letter to Arago, Fresnel added to this, the assumption that the ether inside a moving body is partially carried along with it. Thus, if a rectangular glass prism is moved through the air, for example, it takes in less dense ether through the front surface, condenses it, and expels it out the trailing surface, somewhat like a ramjet. But a part of the denser ether is carried along with it, the more so, the greater the index of refraction.

To understand the non-change of the aberration constant when the telescope tube is filled with water, we have, now, the following: The telescope is inclined forward in the direction of orbital motion of the Earth, so that when the wave front, were it moving through air, reaches the eyepiece of the telescope at the bottom of the tube, the eyepiece has moved forward the requisite amount to "catch" the wave front. But, because we have now filled the tube with water, the wave front, which travels more slowly in water than in air, should be arriving at the eyepiece too late. However, because the more condensed ether within the water is partially carried along with the telescope tube in the direction of the Earth's motion, the wave front is advanced along with the ether, just enough so as to arrive at the eyepiece in time to be seen.

So, with two crucial hypotheses, Fresnel was able to give a complete explanation of aberration. As summarized later by his famous American successor, A.A. Michelson, these two hypotheses were: *first*, that the ether is at absolute rest, excepting, *second*, in the interior of transparent media, where the ether moves with a velocity less than the velocity of the medium in the ratio $(n^2 - 1)/n^2$ (where n is the index of refraction). These were considered as fully confirmed by later experiments, of which an 1851 effort by French physicist A.H. Fizeau was the most famous.

3. The Interferometry Experiments

It was the first hypothesis of Fresnel, which American physicist Albert Abraham Michelson (1852-1931) set out to test in his famous interferometry experiment, first in 1881 in Berlin, then, in 1887, with an improved apparatus, at the Case School of Applied Science in Cleveland, and several times thereafter in the decade of the 1920s. But his results also called into question the validity of the second hypothesis by which Fresnel had explained aberration.

A.A. Michelson was born in 1852 in Strelno, Prussia (now Poland), to a German-Jewish family, which emigrated to the United States in 1854. After temporary employment in New York as a jeweler, his father took the family to San Francisco, where he established a small dry goods business serving the gold rush miners in northern California, moving later to Virginia City, Nevada. Young Michelson was educated at Boy's High School in San Francisco, where headmaster Theodore Bradley encouraged him on a career in science. He tied for first place with two other boys from his state in the examination for scholarship to the U.S. Naval Academy. When he did not get the appointment, he travelled overland to Washington, with a letter from his congressman, seeking an audience with President Ulysses S. Grant. The President told him that the last of the 10 special appointments-at-large had been filled, but advised him to go to Annapolis to see the Commandant of the Naval Academy, who created an additional opening for him.

In 1877, while an instructor in physics and chemistry at the Naval Academy, Michelson conceived of an improvement in the French physicist J.B.R.Foucault's apparatus for determining the velocity of light. Using a $2,000 subsidy from his father-in-law, the wealthy New York businessman Heminway, he determined the velocity of light to be 186,508 miles per second, with an estimated error of one part in 10,000. It was the fourth

terrestrial measurement of the speed of light, the other three having been carried out in France by Fizeau, Foucault, and A. Cornu.

In 1880, Michelson traveled to Europe for post-graduate study under Naval sponsorship. While in Berlin, he conceived of a means to measure the relative motion of the Earth with respect to the ether, in defiance of the assessment of leading British scientist James Clerk Maxwell (1831-1879), who had recently asserted the impossibility of such a measurement.[6]

Drawing on a fund established by Alexander Graham Bell with the Berlin instrument-making firm Schmidt & Haensch, Michelson had an apparatus constructed, which he put to the experimental test in 1881 at Berlin and Potsdam. His idea was to use the phenomenon of interference to detect very small differences in path length between two pencils of light, one travelling back and forth in the direction of the Earth's orbital motion through the hypothesized stationary ether, and the other perpendicular to it. The apparatus, which came to be known around the world as the Michelson interferometer, consisted of two perpendicular brass arms of equal length (about 1 meter), each with a mirror on the end (Figure 2). A source of light at *a* projects its rays to a piece of plate glass, located at *b*, and angled at 45 degrees to the direction of the ray. A thin coating of silver allows approximately half the light to pass through the glass, and down the arm to the mirror at *c*. The remaining half is reflected by the silver coating at a right angle at *b*, down the other arm to the mirror at *d*.

On the return trip, half the rays from *c* are reflected from the silvered back side of *b* into the tube of the telescope at *e*. Half the rays reflected from the end of the other arm at *d* pass through the partially silvered glass *b*, and also enter the telescope at *e*. (At g a plate of glass of the same thickness as *b* is interposed to compensate for the fact that the ray along the arm *bd* is refracted three times, by the thickness of the glass, and that along *bc* only once, in their passage to *e*.)

The apparatus is adjusted so that an interference fringe pattern is seen in the eyepiece of the telescope. Any slight change in the path length or time of travel of light traversing one of the arms, will produce a shift in the observed fringe pattern. If one of the arms of the apparatus were then placed in the direction of the Earth's motion through the ether (presumed stationary), calculation showed that it would take the light ray a longer time to travel the round trip down this arm and back, than the ray traversing the other arm in the perpendicular direction. (The calculation is akin to that of comparing the time it takes a swimmer in a river to swim upstream and back down again, as against swimming across the current.[7])

But, what was the motion of the Earth with respect to the stationary ether? At the time of the 1881 experiment, astronomers had detected a motion of the solar system, of undetermined speed, in the direction of the constellation Hercules. The mean orbital velocity of the Earth, about 30 kilometers per second, was well known. Michelson assumed that the resultant of the two would be the Earth's absolute, or cosmical, motion. By estimating a range of values for the velocity toward Hercules, Michelson estimated an expected displacement of the interference pattern of at least 1/10 of a fringe. His apparatus, which was capable of detecting shifts an order of magnitude smaller, could find no such positive results.

Michelson's first interferometer was plagued with problems. Its sensitivity to vibration meant that it could not be used during the day in Berlin, and at night only with difficulty. The brass arms were subject to differential expansion as a result of temperature changes, and to bending when rotated. Alter-

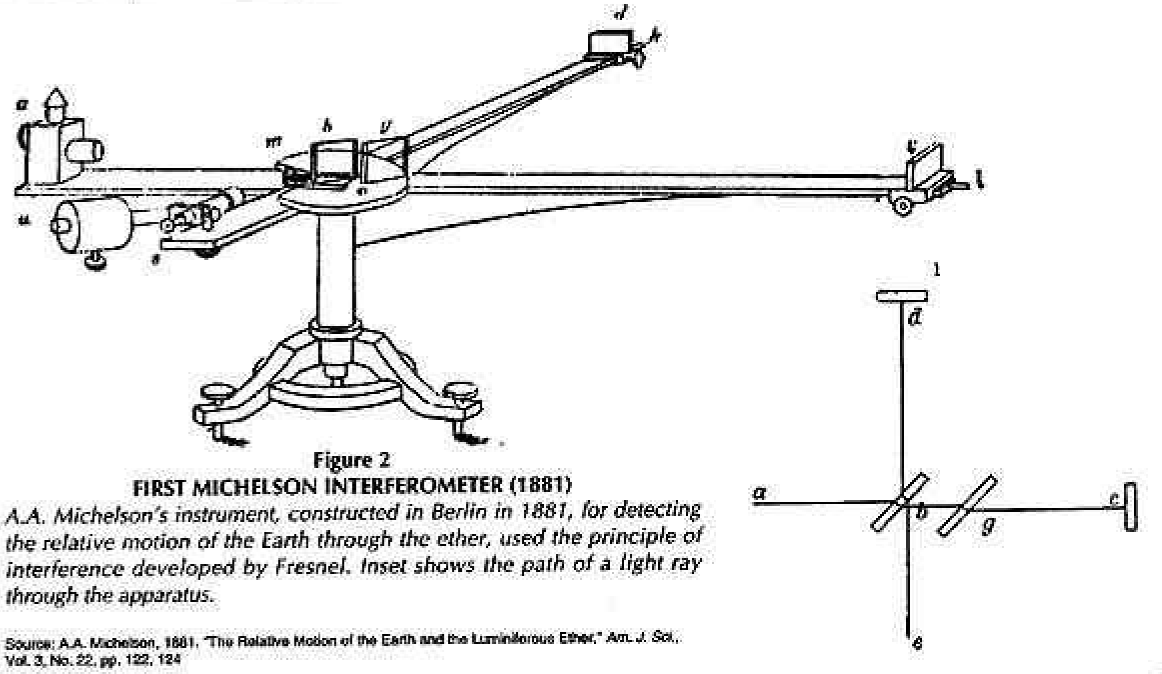

Figure 2

FIRST MICHELSON INTERFEROMETER (1881)

A.A. Michelson's instrument, constructed in Berlin in 1881, for detecting the relative motion of the Earth through the ether, used the principle of interference developed by Fresnel. Inset shows the path of a light ray through the apparatus.

Source: A.A. Michelson, 1881, "The Relative Motion of the Earth and the Luminiferous Ether," Am. J. Sci., Vol. 3, No. 22, pp. 122, 124

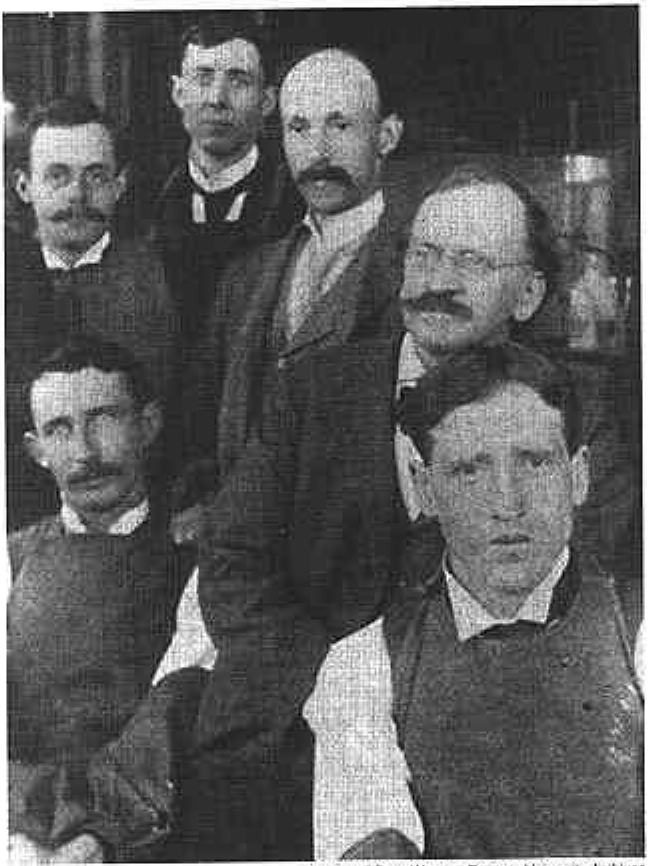

Courtesy of Case Western Reserve University Archives

Edward W. Morley, (upper right), with chemistry students at Western Reserve University, 1896. Although trained as a theologian, Morley became a gifted experimenter in chemistry; he precisely determined the ratio of the densities of oxygen and hydrogen, and the atomic weight of oxygen. Born in New Jersey in 1838, Morley attended Williams College and Andover Theological Seminary. He was the president of the American Association for the Advancement of Science in 1895, and of the American Chemical Society in 1899.

ations were made, and the instrument was removed to the less-trafficked locale of the Astrophysical Observatory in Potsdam, and finally to a stone cellar in the vicinity.

> Here, the fringes under ordinary circumstances were sufficiently quiet to measure, but so extraordinarily sensitive was the instrument that the stamping of the pavement about 100 meters from the observatory, made the fringes disappear entirely! [Michelson 1881, p. 124]

From four series of observations made in April 1881, no significant evidence of a relative motion through the ether could be found. Michelson concluded:

> The interpretation of these results is that there is no displacement of the interference bands. The result of the hypothesis of a stationary ether is thus shown to be incorrect, and the necessary conclusion follows that the hypothesis is erroneous.
>
> This conclusion directly contradicts the explanation of aberration which has been hitherto generally accepted, and which presupposes that the earth moves through the ether, the latter remaining at rest [Michelson 1881, p. 128; the hypothesis he refers to is Fresnel's].

After his return from Europe in 1882, Michelson took the position of Professor of Physics at the newly organized Case School of Applied Science in Cleveland, Ohio. Here he met Edward W. Morley, professor of chemistry at the neighboring Western Reserve University, who had ideas for improvements in the interferometer, particularly respecting the stability of its base. Apart from the hyper-sensitivity of the Berlin-made instrument, a small error in experimental conception had been pointed out to Michelson by M.A. Potier of Paris in the winter of 1881, and later in a published analysis of the experiment by H.A. Lorentz.

With money from the Bache Fund of the National Academy of Sciences, an entirely new instrument was constructed and put into operation in 1887, in the basement of the main building of Western Reserve's Adelbert College in Cleveland. It consisted of a solid block of sandstone 1.5 m square and 30 cm thick, on which was mounted the optical apparatus. To reduce vibrations, the sandstone block rested on a wooden disk, which floated on mercury contained in a circular cast iron tank, the tank resting on a brick pier. This made it possible to rotate the sandstone block holding the optics through 360 degrees, with almost no vibration (Figure 3).

The optical apparatus, built by John A. Brashear of Pittsburgh, was in principle the same as that used in Michelson's Berlin instrument. However, the effective light path was increased by reflecting the light back and forth with four mirrors at each corner, so that it traversed the diagonal of the stone block eight times. This was equivalent to using an interferometer arm 11 m long. On the theory of a stationary ether, pointing one arm of the apparatus in the direction of a velocity equal to that of the Earth in its orbit would produce a displacement in the interference pattern of 0.4 of a fringe width.

Michelson and Morley conducted observations with the apparatus for one hour at noon on July 8, 9, and 11, and one hour in the evening of July 8, 9, and 12 of 1887, the entire series of observations lasting six hours. In each observational session the apparatus was slowly turned through 36 rotations. An observer walked around the instrument, keeping the telescopic image of the interference fringe in his field of view. Every 16th of a circular "turn," the observer read off his estimate of the fringe displacement along graduated markings that were visible in the eyepiece; these were recorded by an assistant.

No 'Null Effect'

The observations did not produce the 0.4 of a fringe width displacement that the motion of the Earth in its orbit would produce, given the theory of a stationary ether. To this day, most popular treatments, textbooks, and even advanced reference works report that the 1887 Michelson-Morley experiment yielded a *null* result. However, as Dayton C. Miller, who began experiments with Morley with an improved form of the original apparatus in 1902, later noted:

> *[T]he indicated effect was not zero;* the sensitivity of the apparatus was such that the conclusions, published in 1887, stated that the observed relative motion of the earth and ether did not exceed one-fourth of the earth's orbital velocity. This is quite different from a null effect now so frequently imputed to this experiment by writers on Relativity [Miller 1933, p. 206; emphasis in original].

We will return to Miller's work and the implications for the Special Theory of Relativity, shortly. Michelson's own evaluation of the experiment does not contradict the words of Miller, although the flavor may be different. We cite it for comparison:

> Considering the motion of the earth in its orbit only, this displacement [of the fringes] should be $2D\ v^2/V^2 = 2D \times 10^{-8}$. The distance D was about eleven meters, or 2×10^7 wave-lengths of yellow light; hence the displacement to be expected was 0.4 fringe. The actual displacement was certainly less than the twentieth part of this, and probably less than the fortieth part. But since the displacement is proportional to the square of the velocity, the relative velocity of the earth and the ether is probably less than one-sixth the earth's orbital velocity, and certainly less than one-fourth [Michelson and Morley, 1887, p. 341].

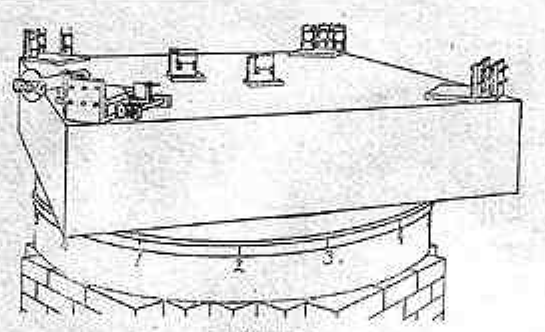

Figure 3

MICHELSON-MORLEY INTERFEROMETER (1887)

Edward W. Morley, chemistry professor at Western Reserve University, conceived of this design for greatly reducing the sensitivity of the interferometer to vibration. The optical apparatus is placed on a 30-cm-thick stone slab, which floats on a circular tank of mercury, allowing the optics to be rotated through 360 degrees.

Source: Illustration from *American Journal of Science*, Vol. 34, No. 203 (Nov. 1887), p. 337, courtesy of Nimitz Library, U.S. Naval Academy, Special Collections and Archives.

Michelson then adds the following important qualification:

> In what precedes, only the orbital motion of the earth is considered. If this is combined with the motion of the solar system, concerning which but little is known with certainty, the result would have to be modified; and it is just possible that the resultant velocity at the time of

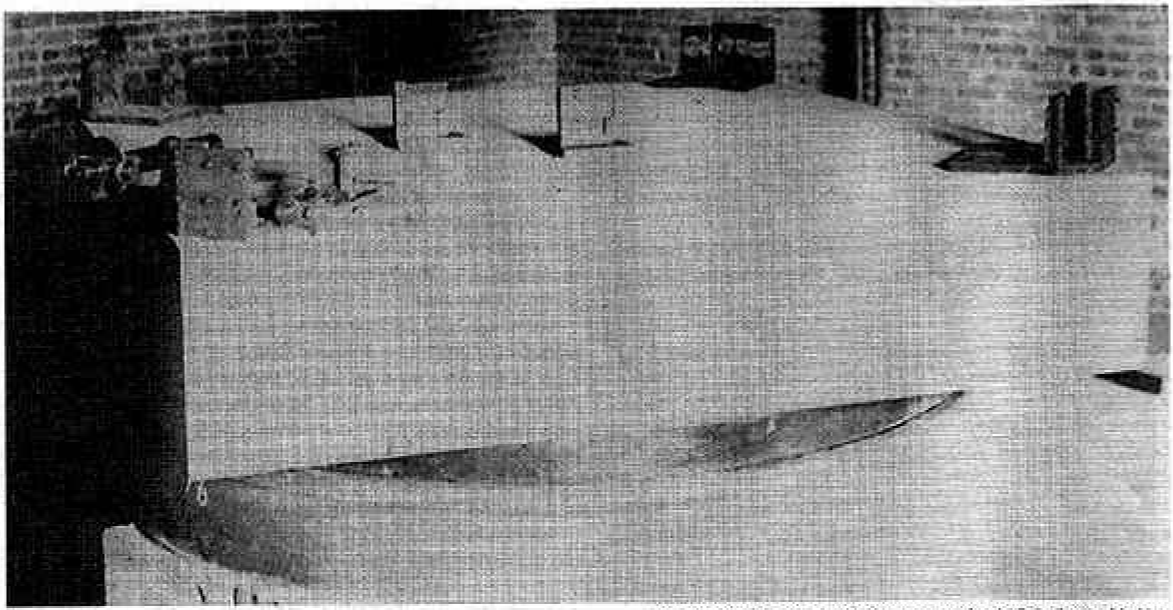

Courtesy of Nimitz Library, U.S. Naval Academy, Special Collections and Archives

The Michelson-Morley experiment of 1887, set up in the basement of Adelbert Hall, Western Reserve University. Results were smaller than expected, but not null!

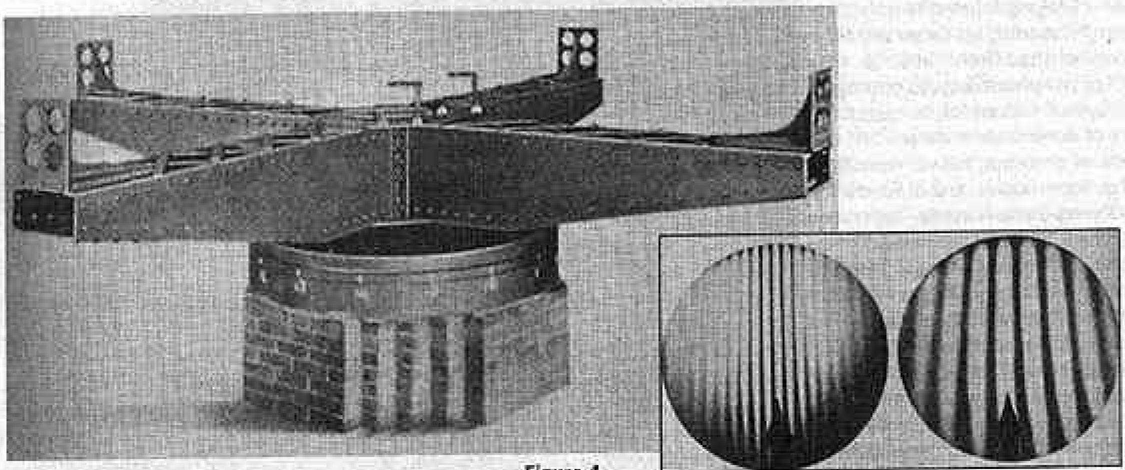

Figure 4

MORLEY-MILLER INTERFEROMETER (1903)

Dayton C. Miller joined Morley in designing a new apparatus, more stable, and, at the same time, more sensitive, than that used by Michelson-Morley in 1887. Structural steel girders forming the arms floated on the original mercury tank. New optics with four mirrors at the end of each arm formed a 32-m effective light path. The instrument is shown almost completed, but without the optics, in 1903, Inset shows the fringe pattern, as seen through the telescope of the interferometer on narrow and broad magnification. The observer estimated the fringe position with respect to the pointer at bottom, in tenths of a fringe width.

Source: E.W. Morley and D.C. Miller, 1905 "Report of an Experiment to Detect the FitzGerald-Lorentz Effect," *Philosophical Magazine*, Ser. 6, Vol. 9 (May), Plate X; D.C. Miller, 1933. "The Ether-Drift and the Determination of the Absolute Motion of the Earth," *Rev. Modern Phys.*, Vol. 5, p. 211 (July).

> observations was small though the chances are much against it. The experiment will therefore be repeated at intervals of three months, and thus all uncertainty will be avoided [Michelson and Morley, 1887, p. 341].

Unfortunately, Michelson did not have the opportunity to make such repeated observations. In 1889, he left the Case School for a brief position at Clark University, and then moved on to the University of Chicago, where he taught for 38 years. His work in the next decade centered on using interferometry to determine the standard of length, for which he became world famous.

But the anomaly in the Fresnel theory of aberration, which Michelson's apparatus had detected, remained, and soon became a topic of worldwide discussion among physicists. In 1891, physicist G.F. FitzGerald of Dublin proposed that the smaller than expected results of the Michelson-Morley experiment might be caused by a shortening of the stone base of the interferometer in the direction of motion of the instrument through the ether, owing to a change in intermolecular forces effected by relative motion through the ether. If the effective light path became shorter in that direction, it could reduce or annul the results expected with the Fresnel hypothesis. British physicist Sir Oliver Lodge promoted the FitzGerald contraction hypothesis in an 1892 address to the British Royal Society.

In 1895, the Dutch physicist H.A. Lorentz, who was engaged in an effort at modifying Wilhelm Weber's electrodynamics to address new experimental results, adopted and elaborated on the FitzGerald hypothesis. He suggested, that the motion through the ether of the electrically charged particles constituting a body, would generate a magnetic effect that would increase the interatomic attractive forces, resulting in a contraction in the direction of motion. If Lorentz's supposition were true, the amount of the contraction would depend on the physical properties of the solid; a change in the material separating the ends of the interferometer ought to produce a change in the amount of shifting of the interference fringes.

Enter Dayton C. Miller

In 1890, the young American physicist Dayton C. Miller joined the faculty at the Case School, which Michelson had recently left, and soon became a close friend of Professor Morley. While the names of Michelson and Morley have become world famous, thanks to the popularity of the Theory of Relativity, that of Miller is less well known. This is unfortunate, because Miller's investigations with the instrument invented by Michelson to detect the relative velocity of the Earth through the ether, were far more extensive than those of either his predecessor, Michelson, or their joint collaborator, Morley.

Dayton Clarence Miller (1866-1941) was born in Strongsville, Ohio. He graduated from Baldwin-Wallace College, and earned a doctorate in science from Princeton University in 1890, working under astrophysicist Charles A. Young. He was president of the American Physical Society during 1925-1926, chairman of the National Research Council's Division of Physical Sciences from 1927 to 1930, and president of the Acoustical Society of America from 1913 to 1933. Apart

from his extended work on the ether-drift experiment, Miller had a lifelong interest in music and acoustics. His mother a church organist, his father a choir member, Miller became an accomplished flutist. In 1908, he invented an instrument he called the phonodeik, to photographically record sound patterns, and with which he established the physical characteristics of the vowels in speech and music. As an expert on architectural acoustics, he was consulted on the design of a number of college chapels, and of Severance Hall in Cleveland.

The Michelson-Morley experiment and the Lorentz contraction hypothesis were a subject of much discussion at the International Congress of Physics in Paris in 1900, at which Professors Miller and Morley were both present. At the urging of William Thomson (Lord Kelvin), the two undertook the construction of a more powerful apparatus to repeat the ether-drift experiment of 1887. By 1902, they had completed an interferometer designed to test the Lorentz-FitzGerald contraction. The base was constructed of planks of white pine 4.3 m long, arranged in a cross. The optical apparatus was the same as the 1887 experiment, but the effective light path was more than three times longer. In observations made in 1902 and 1903, a small positive effect was observed, but the wooden support was so sensitive to changes in temperature and humidity that the apparatus was abandoned.

With an appropriation from the American Academy of Arts and Sciences, a new interferometer was completed by 1904 (Figure 4). Its arms, about 4.3 m long, were made of structural steel girders. It was floated on mercury in the same cast iron trough used in the 1887 experiment. New optical parts made by O.L. Petitdidier of Chicago were used. Four mirrors at the ends of each arm produced an effective light path equivalent to an interferometer arm 32 m long, almost three times that of the 1887 apparatus. This same apparatus was used by Miller in numerous observational sessions over the course of more than 25 years, and in several locations, including atop Mount Wilson in California.

In the first test of the new Morley-Miller apparatus, the distance between mirrors at the ends of the interferometer arms was made to depend on pine wood rods, in hopes of testing the Lorentz contraction. Results of the observations were inconclusive:

> If pine is affected at all as has been suggested, it is affected to the same amount as is sandstone. Some have thought that this experiment only proves that the ether in a certain basement room is carried along with it. We desire, therefore, to place the apparatus on a hill to see if an effect can be there detected.

So reads the conclusion of Morley and Miller's 1905 report on the experiment (cited in Miller 1933, p. 216).

In 1905, the interferometer was moved to a hut, on an unobstructed site on a hill in Cleveland Heights, at an altitude of about 285 m. The pine rods were removed, and the mirrors fastened directly to the steel base of the instrument. The hut and wooden covering of the instrument were provided with glass windows, to prevent possible obstruction of the ether flow. Observations were made in July, October, and November, consisting of 230 turns (rotations) of the apparatus in three sets. These showed a very definite positive effect (displacement of the fringes in certain directions), but too small to be reconciled with the Fresnel theory.

When Miller returned from summer vacation the next year, the property where the interferometer was housed had been sold, and the new owner demanded its immediate removal. The retirement of Professor Morley, and other circumstances, contributed to a long delay in Miller's interferometry work.

The Theory of Relativity

It was not until 1921 that Miller resumed experimentation with the interferometer. By that time, Einstein's Theory of Relativity had gained support among some scientists, and a great deal of publicity. Neither Michelson nor Miller could be counted among its adherents.

When Einstein developed the Special Theory of Relativity, in 1905, the interferometry experiments of Michelson, Morley, and Miller were not much in his thoughts. The title of his first paper on the subject, *Zur Elektrodynamik bewegter Körper* ("Toward the Electrodynamics of Moving Bodies"), indicates the direction of his thoughts. The problem he addressed in physics had its roots in Wilhelm Weber's formulation of the fundamental law of electrodynamics, which he had developed in conjunction with Carl Friedrich Gauss in 1845. Weber had determined, by an experimental proof of the validity of the Ampère angular force, that the force between two moving electrical particles would be dependent on the relative velocities and accelerations of the particles, and on a constant, which was determined in 1854 to be equal to the square root of 2 times the speed of light. Some important derivatives of Weber's work included an electrodynamic determination of the cause of the advance of the perihelion of Mercury,[9] the determination of a limit on relative velocities, and a theoretical determination of the classical electron radius, several decades before its experimental validation.[9]

What remained to be done after Weber's work, was to construct an intelligible representation of the deeper relationship among the phenomena of gravity, electrodynamics, and optics. This was the stumbling block already addressed by Gauss in his correspondence with Weber in 1845.[10]

Einstein's imaginative attempt at a solution centered on his recognition of the physical significance of a philosophical problem which he called the *paradox of simultaneity*. The determination of the simultaneity of two events depends on the position and relative velocity of the observer. Depending on the arrangement of these two variables, the same two events can occur before, after, or simultaneous with another. The implication for physics is an interdependency between the measures of length and time (and therefore, by the system of units which Gauss had established in 1832, of *mass*, as well,[11]) an interdependency whose implications were most thoroughly explored by Gauss's prized student, Bernhard Riemann, in his 1854 Habilitation dissertation.

However, Einstein introduced into his system some additional assumptions, principal among which were (1) the requirement that the velocity of light be invariant, regardless of the velocity of the emitting source, and (2) the non-existence of an ether at absolute rest. Thus, for the theory of relativity to be valid, it was necessary that the results of measurements with the Michelson interferometer be *absolutely zero*, or *null*. Unfortunately, the experimental evidence did not satisfy this re-

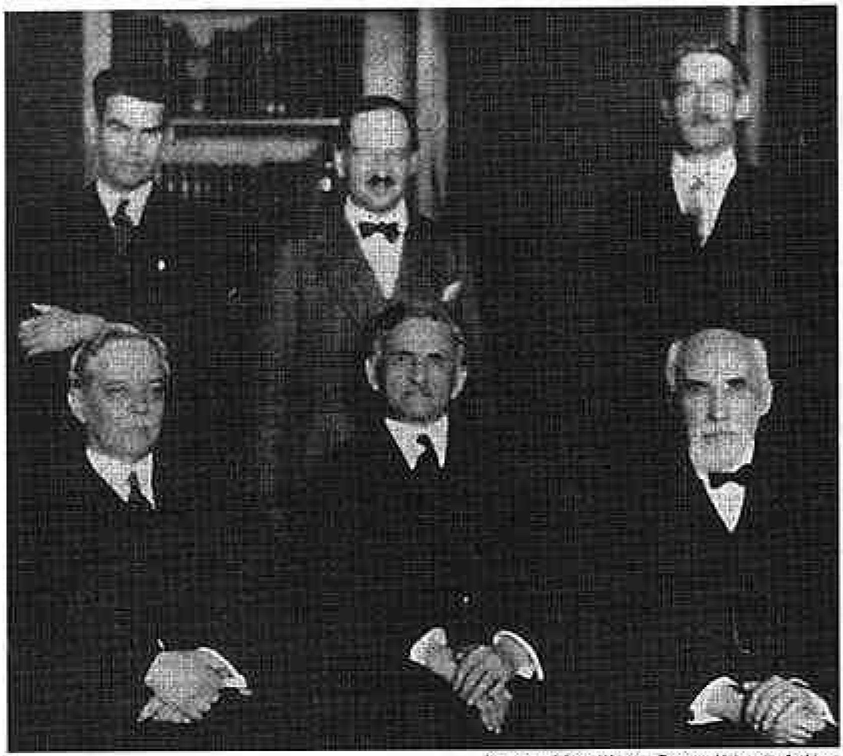

Courtesy of Case Western Reserve University Archives

Front row, from left: Dayton Miller, Albert Michelson, and H.A. Lorentz.

The Morley-Miller steel interferometer with its large cast iron tank for mercury was transported across the continent to the grounds of the Mount Wilson Observatory in California, and set up in March 1921, with the intention of measuring the ether-drift at the higher altitude there (1,750 m). Sixty-seven sets of observations produced a positive effect, corresponding to a relative motion of Earth and ether of 10 kilometers per second. Tests were made on the instrument to isolate the effects of radiant heat. A concrete base was tried in place of the steel girders, still producing positive results.

The apparatus was returned to Cleveland and experiments were made under various controlled conditions, between 1922 and 1924. Artificial light sources were tried, and the results found not to differ with those obtained with sunlight. (From then on, the acetylene headlamp, used at that time on automobiles, became the standard light source.) Extended tests were made of the effect of heat variations on different parts of the instrument.

quirement. A small, but persistent positive result kept cropping up in the most carefully conducted experimental trials with the most powerful interferometry apparatus available.

In 1919, the General Theory of Relativity gained notoriety after an astronomical expedition to equatorial Africa, led by Sir Arthur Eddington, photographed the light from a star occulted by the Sun during a total solar eclipse. Examination of the photographs seemed to suggest a slight bending of the path of the starlight around the Sun, consistent with Einstein's theory. The scant physical evidence was somewhat out of proportion to the worldwide publicity blitz that followed its announcement.

First Mt. Wilson Experiment

This was the context for Dayton C. Miller's return to his earlier experiments in interferometry, as he describes in a 1933 review of his efforts:

> Since the Theory of Relativity postulates an exact null effect from the ether-drift experiment which had never been obtained in fact, the writer felt impelled to repeat that experiment in order to secure a definitive result. An elaborate program was prepared and ample funds to cover the very considerable expense involved were very generously provided by Mr. Eckstein Case of Cleveland [Miller 1933, p. 217].

Albert Einstein visited Miller at Case on May 25, 1921, and urged further experimentation.

Miller's New Hypothesis

The interferometer was moved again to Mount Wilson in 1924, and set up in August at a new site, less exposed to the wind. A series of observations was made in September 1924, and in March-April 1925. While positive results were again obtained, a new paradox in their interpretation arose, the solution of which led Miller to his final theory of the ether-drift experiment. Calculations based on the effects of the orbital motion and apparent motion toward Hercules, predicted maximal variations in magnitude and azimuth to occur between September and April. These were not detected.

Miller realized that an assumption underlying all previous experiments with the interferometer might be invalid. It had previously been assumed that the Earth's velocity through the ether was known; namely, that it was the resultant of the orbital motion, combined with the motion of the solar system toward Hercules. What if, instead, the assumption were made that we do not know all of the motions which combine to produce the Earth's absolute motion through the ether? As we do know the results observed by the interferometer, however, we may take these as the primary data for the purpose of adducing the magnitude and direction of the Earth's absolute motion through the ether.

Why had no one thought of this approach before, Miller wondered? He wrote:

> The answer is, in part, the fact already stated that the purpose [of previous experiments] had been the verification of certain predictions of the so-called classical

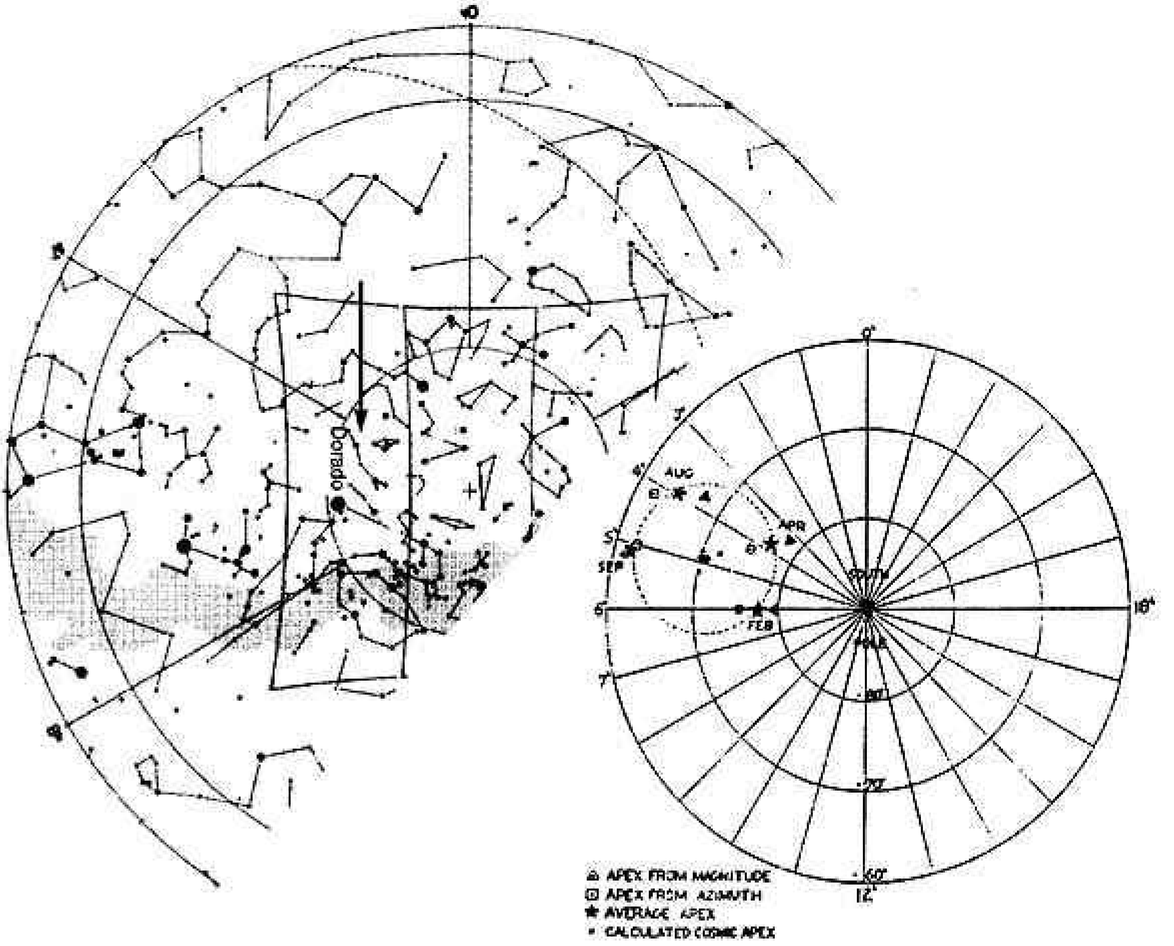

Figure 5

MILLER'S CHART OF THE APEX OF EARTH'S COSMICAL MOTION (1933)

Miller's analysis of the 1925-1926 observations at Mount Wilson, showed the Earth was moving in space at 208 km per second, toward a point in the southern celestial hemisphere in the constellation Dorado. The calculated apex of motion is at the center of the dotted circle. Starred points indicate the calculated apex of motion at each of the four epochs when observations were made. The accompanying stellar map shows the position of Dorado.

Source: D.C. Miller, 1933. "The Ether-Drift and the Determination of the Absolute Motion of the Earth," *Rev. Modern Phys.*, Vol. 5, p. 232 (July).

> theories; and, in part, that it is not easy to develop a new hypothesis, however simple, in the absence of direct indication. Probably a considerable reason for the failure is the great difficulty involved in making the observations at all times of day at any one epoch. Very few, if any, scientific experiments require the taking of so many and continuous observations of such extreme difficulty; it requires greater concentration than any other known experiment. . . [Miller 1933, p. 222].

Results from Mount Wilson 1925-1926

The observations at Mount Wilson of April, August, and September 1925, and of February 1926 were conducted under the new hypothesis.

The reduction of the data from this cycle of observations was an enormous effort. The records consisted of 316 pages of readings, showing the fringe displacement at each of the 16 circular positions (azimuths) of the interferometer on each turn. A number of ingenious geometric models were constructed to aid in the visualization and computation of the effect. Altogether, 250,000 distinct observations were involved.

Miller presented a preliminary solution on Dec. 29, 1925 in his address as president of the American Physical Society to its Kansas City convention. The point on the celestial sphere toward which the Earth moves because of its absolute motion is defined as its *apex of motion*. Based on observations through Sept. 15, 1925, Miller and assistants calculated an apex of motion in the northern celestial hemisphere of right ascension 17 hours and declination +65°.

Following a fourth observational series, made on Feb. 8, 1926, all of the data were subjected to an elaborate reexamination. The results, presented to the Pasadena Ether-Drift Conference, Feb. 4-5, 1927, showed an apex of motion of right ascension 17 hours and declination +68°—close to the 1925 results.

Miller's Final Results

Miller undertook a new study of the Mount Wilson series of observations in 1932. The possibility that the apex of motion was on the same line, but in the opposite direction, was examined, and found to be the more probable. The apex finally determined was in the southern celestial hemisphere at right ascension 4 hours 54 minutes and declination −70°33′. It lies in the constellation Dorado (Sword Fish) in the great Magellanic Cloud.

Courtesy of Case Western Reserve University Archives

Dayton Miller at the Case School, with the Henrici harmonic analyzer, which he used earlier for sound and later for interpretation of interferometer data.

The calculations connected with the 1932 re-analysis also permitted, for the first time, an estimate of the Earth's cosmic speed. For each of the four epochs (Feb. 8, April 1, Aug. 1, and Sept. 15), an apex of motion was calculated, once from the data for the magnitude of fringe displacement (*velocity*), and once from the record of *azimuth* of the interferometer. From the two apices, which lay close to each other in each case, a mean apex was derived for each of the four epochs. These were found to lie on a small circle on the celestial sphere (Figure 5), whose center was taken to be the already reported apex of cosmic motion.

The model in Figure 6 indicates how the estimation of speed was made. Depicted are the orbital position of the Earth, at each of the four epochs when interferometer observations were made. The diagonal of each parallelogram points to the mean apex for that epoch; the long side points to the calculated apex of motion (the center of the circle). The short side of the parallelogram represents the known orbital velocity of the Earth, of about 30 kilometers per second. Knowing the direction of three sides of a triangle, and the magnitude of one side, allows a simple determination of the magnitude of the other sides. By such means, an estimated velocity of 208 kilometers per second toward the southern constellation Dorado was obtained. That is Miller's estimate of the absolute motion of the Earth through the ether.

The direction of motion is within 6 degrees of being perpendicular to the plane of the ecliptic (the plane in which the elliptical motion of the planets occurs), from which Miller conjectures:

> This suggests that the solar system might be thought of as a dynamic disk which is being pulled through a resisting medium, and which therefore sets itself perpendicular to the line of motion.
>
> The fact that the sun is moving towards the southern apex with a velocity of 208 kilometers per second and at the same time is apparently moving, with respect to the near-by stars, in the opposite direction towards the constellation Hercules with a velocity of 19 kilometers per second, indicates that the group of stars as a whole is moving towards the southern apex with a velocity of 227 kilometers per second [Miller 1933, p. 234].

A new paradox now arises. By the methods just described, Miller found a velocity of approximately 200 kilometers per second for each of the four epochs. However, the velocities adduced from direct observation of the fringe displacements are smaller by about a factor of 20. Some additional physical assumption is necessary, as Miller notes, to account for the reduction in observed velocity. Perhaps this is to be explained by an additional "drag" on the ether at the Earth's surface, or, perhaps, by an entirely different hypothesis. The question is left open.

An extraordinary coincidence of phase, in both the velocity (fringe displacement) and azimuth curves for all four epochs, when they are plotted against sidereal time, was noted by Miller. The minima of the velocity curves occur at about 17 hours for all four epochs. These can be seen in Miller's graphs, reproduced as Figures 1 and 2 in the accompanying article by Maurice Allais (p. 26). The same coincidence of phase among

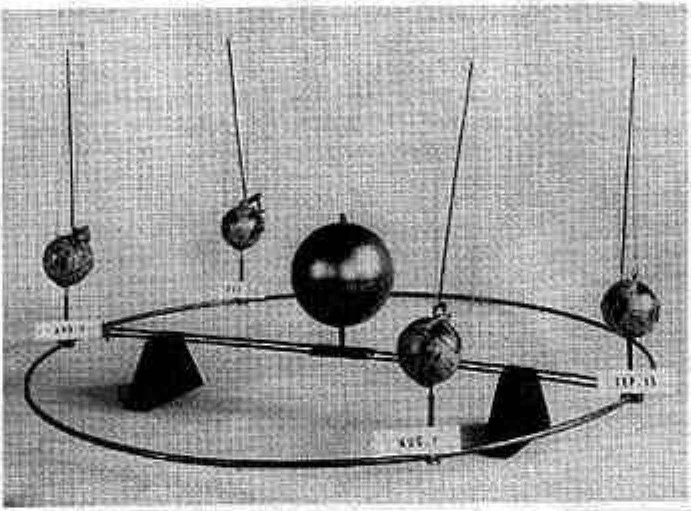

Figure 6
MODEL USED TO CALCULATE THE EARTH'S ABSOLUTE VELOCITY
Miller's model shows the Earth's orbital position at each of the four epochs in 1925-1926, when interferometer observations were made at Mount Wilson. The parallelograms indicate the Earth's orbital velocity (horizontal leg), and velocity of cosmical motion. The direction of motion is south, or downward.

Source: D.C. Miller, 1933. "The Ether-Drift and the Determination of the Absolute Motion of the Earth," Rev. Modern Phys., Vol. 5, p. 234 (July); photo courtesy of Case Western Reserve University Archives.

all four epochs was not present when the data were plotted against civil time. Miller took this as strong evidence for his conclusion that the orbital velocity is only a small fraction of the Earth's cosmical velocity through the absolute ether. (Civil time is based on the apparent position of the Sun in the sky, and thus reflects the Earth's orbital motion. Sidereal time is a measure of the Earth's rotation against the background of relatively fixed, distant stars; the Earth's orbit of the Sun is not involved.)

The phase correlation is also strong, almost irrefutable, evidence of the existence of a real effect, as opposed to a spurious or accidental cause. Miller also showed how the orbital component was responsible for the flattening of the curves in February and April, and the accentuated minimum six months later—again a coincidence of theory and observation which is difficult to ascribe to accident.

The Debunkers

In 1955, R.S. Shankland of the Case Institute of Technology in Cleveland, who had been a research associate of Miller in the 1932-1933 reanalysis, reported on a new study of Miller's work by a four-man team which he led. His conclusion was that

> the small periodic fringe displacements found by Miller are due in part to statistical fluctuations in the readings of the fringe positions in a very difficult experiment. The remaining systematic effects are ascribed to local temperature conditions [Shankland et al., 1955, p. 167].

Shankland re-examined Miller's 1923 laboratory tests on the effect of temperature variations on the instrument, in which Miller intentionally exposed different parts of the apparatus to the output of electric heaters. Shankland believed that the laboratory records showed "small but certain temperature effects," in contrast to Miller's conclusion. By a sophisticated analysis, he attempts to prove that it is possible for temperature variations to produce regular periodic effects. Examining the careful temperature records from Mount Wilson, Shankland then concludes that temperature variations in the exposed shed on Mount Wilson were the cause of the periodic fringe displacements, which Miller and his assistants observed.

By itself, the Shankland study might not be too significant, but it is supported by two other important elements. One is the great credibility afforded the Theory of Relativity, which requires as a premise the non-existence of the effects detected by Miller. The second, stronger supporting element is the fact that the results of a number of other interferometry experiments, carried out by careful and competent investigators contemporary with Miller, produced almost null results. These were, in summary:

- An experiment by R.J. Kennedy, using a very sensitive interferometer sealed in helium, on Mount Wilson in 1926.
- An interferometer enclosed in a vacuum casing, sent up by balloon to an altitude of 2,500 meters, and later taken to the summit of Mount Rigi, by A. Piccard and E. Stahel of Brussels in 1927.
- An interferometer having an effective light path of 25.9 m, mounted in the constant temperature vault of the Mount Wilson Observatory, by Michelson himself, with assistance of F.G. Pease and F. Pearson in 1929.
- An interferometer of 21m light path mounted on a quartz base (to avoid effects of magnetostriction), in a vacuum housing with photographic registration, by Georg Joos at Jena in 1930.

(The light path of Miller's apparatus was 32m.)

To account for the almost zero displacements found in these varied attempts, Miller noted that in all these experiments, the interferometer was enclosed either in metal casings, or basement rooms of laboratories, or both. "If the question of an entrained ether is involved in the investigation, it would seem that such massive and opaque shielding is not justifiable" (Miller 1933, p. 240). He also noted that none of the other experimenters conducted observations over a sufficiently extended time period to be able to detect epochal variations.

In 1959, Maurice Allais commented on the Shankland paper:

> However, this criticism does not account for the extraordinary consistency of Miller's results with the motion of the earth about the sun (see Figs. 23 and 28 of his paper, pp. 232, 237). Similarly, it does not account for the remarkable adjustments with phases which agree with sidereal time, as shown on p. 235 of his work. It also leaves out the agreement between Miller's and Esclangon's results. . . [Allais 1959].

Science and Uncertainty

As difficult as it is to prove with absolute certainty (without more experimentation) that Miller's results are real, and not spurious, it is worth considering that the opposite case, an *absolutely null* result, as required by Einstein's theory, is far more difficult to establish with certainty. It is, first of all, in the nature of things that *nothing* is very difficult to prove, and for such reasons, we do not require a criminal defendant to prove his innocence, but rather put the burden on the other side to establish guilt.[12]

The uncertainty in connection with Miller's observations does not at all diminish their importance; quite the opposite. The experimental detection of very small deviations from an expected result is the very heart of science, and the foundation of its progress. It is always attended by uncertainty.

Kepler's determination of the very slight deviation of the Earth's orbit from a perfect circle is a case in point.[13] A statistical analysis of Tycho Brahe's data, combined with consideration of the effects on his metallic instruments of the horribly cold winter nights on the island of Hven, in Denmark, can provide plausible grounds for ignoring the tiny angular deviations on which the whole of Kepler's astronomy rest. The difference between the major and minor axis of the ellipse, which, as every school child is taught, constitutes the Earth's orbit around the Sun, is about one part in one thousand. It is not visible to the naked eye in a scale drawing, nor would it be in a time-lapse photograph taken from a spacecraft hovering above the disk of the solar system. A test by reproducibility was not a possibility. In short, the experimental grounds for Kepler's astronomy were not valid at the time he developed it, by the standards many scientific authorities would wish to apply today! The same applies to many of the most important discoveries in the history of chemistry, the proof of which rested on extremely fine measurements, at the edge of uncertainty, with a precision balance. One could start with Antoine Lavoisier's early work in determining the minute impurities present in water, for a case study.

Scientific discovery has never been the surefire certainty that textbooks and popular commentaries so often portray. Like all creative exercise of the mind, it is filled with uncertainty, ambiguity, subjectivity. It is always an uphill battle, too often amidst great adversity. Matters here are not decided by majority vote, popular opinion, or consensus. The timid, the fainthearted, the seeker of praise, of public approval, or recognition within his lifetime had best stay away. If this disqualifies the vast majority of our current crop of, even highly decorated academic specialists, so be it.

The Contribution of Maurice Allais

The beauty and genius of M. Allais's work in physics is that he recognizes the necessary existence of an anomaly in our understanding of the propagation of light, and at the same time seeks to discover its meaning by extending the investigation into the necessarily related realm of gravitation. In this issue, we are, regretfully, limited to a presentation of his unique analysis of the Dayton Miller experiments. In future, we hope to be able to present the rest.

A brief overview of Allais's scientific work is found in the box accompanying his article, p. 26. To put it in a nutshell: Allais found that anomalies in the motion of the Foucault pendulum, and in a pendulum of an additional degree of rotational freedom (paraconical), exhibited a periodic character inexplicable by accepted gravitational theory. He discovered an identical periodicity in the anomalies found in reciprocal optical sightings made by two theodolites, aligned on north-south axis, and thus he established a lawful connection between the separate domains of mechanics and optics. This led to the proposal for experimental verification of the hypothesis that simultaneous observations of the paraconical pendulum, the reciprocal theodolite sightings, and the Michelson interferometer would lead to a coincidence of effects. M. Allais, age 86, has not yet enjoyed the opportunity to see his prediction tested.

Related Investigations

Dayton Miller provides a summary, in his 1933 report, of some of the related investigations, which he regarded as showing evidence of a cosmical motion similar to that he detected. They might, alternatively, be interpreted from Allais's standpoint as evidence of an *optical anisotropy* of space.

At the same time that Miller was conducting his experiments, the director of the Paris Observatory, E. Esclangon, made extensive studies of periodic deformations in the Earth's crust (Earth tides). These suggest a motion of the solar system in the plane cutting through the sidereal time meridian of 4 and 16 hours. Esclangon also studied anomalies in the reflection of light which, he concluded, was evidence of an "optical dissymmetry of space" around an axis lying in the plane of the meridian of 8 hours and 20 hours. Allais also references Esclangon's work.

Observation of the intensity of cosmic rays at the time of Miller's work showed a definite maximum in the sidereal meridian of 5 hours and 17 hours. Studies of galactic motions, and anomalies in astronomical observations are also cited. Finally, the work of Karl Jansky at Bell Telephone Laboratories in 1933 showed a hissing sound in shortwave radio reception, coming from a cosmic direction in the sidereal meridian of 18 hours.

A systematic review of more modern work is not available to us. The recent observations of astronomers Nodland and Ralston are worth noting.[14] By studying the rotation of plane of polarization of radiowaves from distant cosmic sources, an anisotropy is adduced. The axis of anisotropy lies in the direction between constellation Aquila and Sextans at right ascension 21 and 7 hours ±2 and declination 0° ±20°. This might be considered as perpendicular to the apex of cosmic motion determined by Miller.

Laurence Hecht, an associate editor of 21st Century, *is in the fifth year of a 33-year prison sentence imposed by the Commonwealth of Virginia. He was sentenced by jury trial in January 1991 in the aptly named venue of Salem, Virginia, as* *part of a nationwide witch-hunt against leading political associates of Lyndon H. LaRouche, Jr. All appeals have been denied. A worldwide campaign is under way for the exoneration of LaRouche and the release of Hecht and four other LaRouche prisoners, all serving long sentences arising from a politically motivated frame-up. For more information and to find out what you can do to help, contact the Schiller Institute; P.O. Box 20244, Washington, D.C. 20041, Tel. (703) 771-8390.*

Notes

---

1. A. Fresnel, "Memoir on the Diffraction of Light," in Henry Crew, ed., *The Wave Theory of Light* (New York: American Book Co., 1900) p. 116.

   The Huygens-Leibniz conception of propagation as a self-reproducing phenomenon is considerably more sophisticated than many later defenders of the wave theory recognized. Modern discussion of the issue tends to focus on two other problems: the existence, or non-existence of a transmitting medium, and the question of wave versus particle. Whichever alternative is chosen, the problem of what occurs in between transmission and reception is usually subjected to an overly close shave with Occam's razor. The assumption of a linearly continuous action is introduced, ignoring the fact that the whole power of modern optics rests on Fresnel's recognition of the efficient power of a non-linear, self-reproducing mode of propagation known as Huygens's Principle.
2. Laurence Hecht, "The Atomic Science Textbooks Don't Teach: The Significance of the 1845 Gauss-Weber Correspondence," *21st Century Science and Technology*, Fall 1996, pp. 21.
3. Bernhard Riemann, "Philosophical Fragments," and excerpts from "On the Hypotheses Which Lie at the Foundations of Geometry," in *21st Century*, Winter 1995-1996, p. 50.
4. Present approved history of physics is premised on an oft-repeated historical fraud concerning Maxwell's alleged contribution to the interpretation of Weber and Kohlrausch's 1854 determination of the *Weber constant* (what is today, mistakenly, referred to as the ratio of the electromagnetic to the electrostatic unit of action). In a letter to his brother in 1853, Riemann, who would assist at the classic experiment the next year, had already predicted the identity of the velocity of light with the velocity of propagation of electrodynamic action. Weber, preceded in publication by Gustav Kirchoff, demonstrated by 1857 the theoretical propagation of an electric wave in a conducting wire at the velocity of light. The solution of the problem of a unified conception of gravity, electricity, and magnetism, on which Riemann and associates labored, was not advanced, but set back, by the acceptance of Maxwell's mechanistic reductionism.
5. E.T. Whittaker, *A History of the Theories of the Ether and Electricity.*
6. Michelson's experiment was the second serious American challenge to British scientific authority in the period. The first was the 1879 work of Edwin Herbert Hall and Henry Augustus Rowland in discovering the transverse electrical force known as the Hall effect. Hall's report of the discovery in "On a New Action of the Magnet on Electric Currents," (*Am. J. Math.*, Vol. 2, p. 287, 1879), describes his and Rowland's doubt over the truth of Maxwell's assertion that a magnet acts "not on the electric current [in a wire], but on the conductor which carries it." Their experiment proved Maxwell in error, and established the existence of a force on an electric current, acting perpendicular to the direction of its flow, when the current is moving in a plane perpendicular to the line connecting the north and south poles of a magnet.
7. To find the difference in the two paths *aba* and *aca*, Michelson shows in his 1887 paper:

   Let V = velocity of light
   v = velocity of the earth in its orbit.
   D = distance *ab* or *ac*, fig. 1.
   T = time light occupies to pass from *a* to *c*.
   T′ = time light occupies to return from *c* to *a′*. (Fig. 2).

   Then $T = \frac{D}{V-v}$, $T' = \frac{D}{V+v}$. The whole time of going and coming is $T+T' = 2D\frac{V}{V^2-v^2}$, and the distance traveled in this time is $2D\frac{V}{V^2-v^2} = 2D\left(1+\frac{v^2}{V^2}\right)$, neglecting terms of the fourth order. The length of the other path is evidently $2D\sqrt{1+\frac{v^2}{V^2}}$ or to the same degree of accuracy, $2D\left(1+\frac{v^2}{2V^2}\right)$. The difference is therefore $D\frac{v^2}{V^2}$. If now the whole apparatus be turned through 90°, the difference will be in the opposite direction, hence the displacement of the interference fringes should be $2D\frac{v^2}{V^2}$. Considering only the velocity of the earth in its orbit, this would be $2D \times 10^{-8}$. If, as was the case in the first experiment, $D = 2 \times 10^6$ waves of yellow light, the displacement to be expected would be 0.04 of the distance between the interference fringes [Michelson 1887, p. 336].

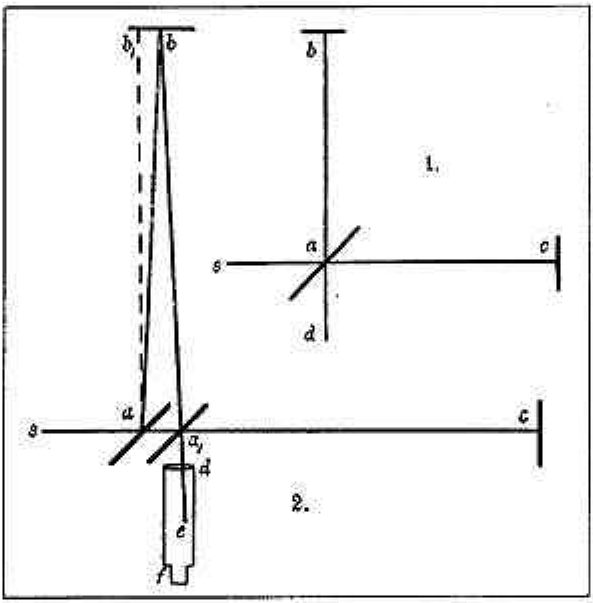

8. C. Seegers, 1864. "De motu perturbationibusque planetarum secundum legem electrodynamicam Weberianam solem ambientium" (Göttingen).

   F.F, Tisserand, 1872. "Sur le mouvement des planètes autour du Soleil d'après la loi electrodynamique de Weber." (Paris: *Compt rend.*, Sept. 30).
9. Hecht, *op. cit.*
10. For an English translation of the relevant correspondence, see *21st Century Science & Technology*, Fall 1996, pp. 41-43.
11. C.F. Gauss, 1832. *Intensitas vis magneticae terrestris ad mensuram absolutam revocata.* Unpublished English translation.
12. The difficulty of experimentally verifying a null result has an important precedent in the history of modern physics. When Wilhelm Weber set out to establish the validity of Ampère's angular electrodynamic force, he noted as a weakness of Ampère's case, that his experimental evidence rested on null results, the *non-appearance* of movement in certain configurations of current-carrying wires. Weber noted that it were possible that effects, such as friction, might be masking very small forces which Ampère had not considered. With the help of Carl Friedrich Gauss, Weber was able to design an experiment which measured the electrodynamic interaction with such precision that the Ampère angular force could be established through positive evidence.

    See Wilhelm Weber, 1846. "Elektrodynamische Maasbestimmungen: über ein allgemeines Grundgesetz der elektrischen Wirkung" in *Wilhelm Webers Werke* (Berlin: Julius Springer, 1893) Vol. 3, pp. 25-214. Unpublished English translation by Susan P. Johnson.
13. Pedagogical series by Jonathan Tennenbaum, "How Gauss Determined the Orbit of Ceres," in *The New Federalist* newspaper, beginning in December 1997.
14. See David Cherry and Charles B. Stevens, "Does Light Travel Faster in the Earth-Sextans Direction?" and interviews with Nodland and Ralston in *21st Century*, Summer 1997, p. 72.

References

M. Allais 1959, "Should the Laws of Gravitation Be Reconsidered (Part II)" *Aero/Space Engineering*, Vol. 18, No. 10, Oct., pp. 51-55.

A.A. Michelson, 1881. "The Relative Motion of the Earth and the Luminiferous Ether," *Am. J. Sci.*, Vol. 3, No. 22, p. 120.

A.A. Michelson and E.W. Morley, 1887. "On the Relative Motion of the Earth and the Luminiferous Ether," *Am. J. Sci.*, Vol. 3, No. 34, p. 333 .

D.C. Miller, 1933, "The Ether-Drift and the Determination of the Absolute Motion of the Earth," *Rev. Modern Phys.*, Vol. 5, p. 203 (July).

R.S. Shankland, S.W. McCuskey, F.C. Leone, G. Kuerti 1955. "New Analysis of the Interferometer Observations of Dayton C. Miller," *Rev. Modern Phys.*, Vol. 27, p. 167.